| | | | | | | |
|---|---|---|---|---|---|---|
| | | | | | | |
| | | | | | | |
| | | | | | | 变更针头与针管结构 |

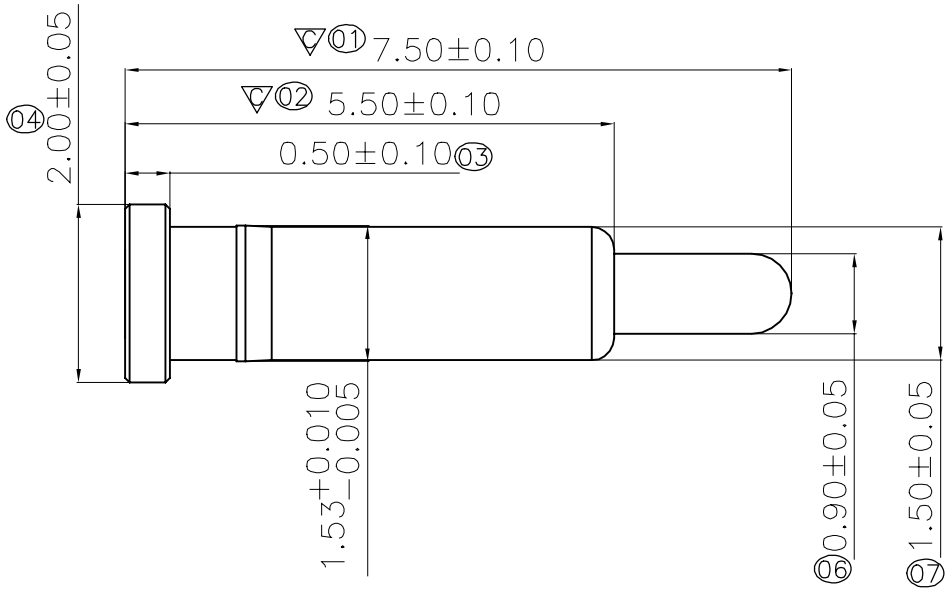


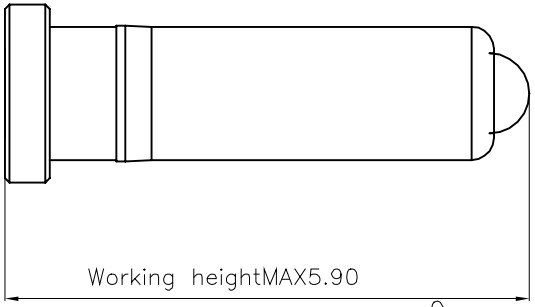


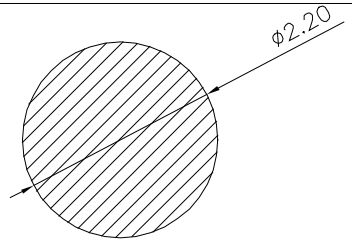


NOTE:

1.Material
 .Plunger: Brass

2.Plating
 .Contact surface:1u" minimum Au over 80~100u" Ni

3.Electrical
 .Rated Current & Voltage: DC 12V; AC 1~1.65A,24H
 .Contact Resistance: 25mΩ maximum

4.RoHS COMPLIED PROUCT.

5.Elasticity:Stroke 0mm:10gfStroke 0.25mm:50gf Stroke 1.60mm (or fully compressed):100−150gf

6.Life (Million):stroke range Max0.5~4mm,根据Pin的总类不一样Max. Stroke 10000次 Touch down后重量变化 0.5gf以内Creep变形最小化

7.Temperature: −40度~150度

8.Use:电子摄影：通电；手机：天线、接地、电池接触。

# PCB LAYOUT

Layout Tolerance:±0.20mm

| DIM | TOL | DIM | TOL |
|---|---|---|---|
| X. | | X° | 3° |
| X.X | ±0.20 | X.X° | |
| X.XX | ±0.15 | X.XX° | |
| X.XXX | ±0.10 | X.XXX° | |

深圳市泰科汉泽精密电子有限公司
Tyco Hanconn Precision Electronics

Spring Probe

| | | | | | |
|---|---|---|---|---|---|
| DRAW NO. | | DATE | MATERIAL:Brass C3604 | DRAW NAME: | |
| DESIGN: | 譚立強 | 2012.02.13 | FINISH:Au1~3u",Ni,80~120u" | SEE TABLE | |
| CHECK: | | | FILE: | | |
| REVIEW: | | | P/N:SEE TABLE | | |
| | | | REV. A1 / SCALE N/A | UNIT: mm / SHEET: 1/1 | |